TECHNICAL COMMITTEE MEETING MINUTES
Wednesday, December 3, 2014
2nd Floor Conference Room
Plant Site, 111 Harbor View Avenue
5:30 p.m.

Daniel Capano	Chairman, Technical Committee
Gerald Bosak Jr.	Committee Member (Absent)
Edward Kelly	Committee Member
William Brink	Executive Director, WPCA
William Degnan	Plant Supervisor, WPCA (Absent)
Prakash Chakravarti	Supervising Engineer, WPCA
Merritt Nesin	Stamford resident.

1. **Call to Order and Roll Call**
   D Capano called the meeting to order at 5:33 pm.

2. **Approval of Nov 5, 2014 Technical Committee Meeting Minutes**
   E Kelly made the motion to approve the minutes of the meeting for Nov 5, 2014. Seconded by D Capano; the motion carried 2-0-0.

3. **Presentation by Hazen & Sawyer engineers of the findings and recommendations of their evaluation of flow distribution to the secondary clarifiers, replacement of UV disinfection system and the plant's effluent pumps.**
   Engineers, Mr. Benjamin Levin, Mr. David Nailer and Melanie Mann of Hazen & Sawyer presented the evaluation/findings and recommendations. (Presentation is attached herewith)

   D Nailor presented his findings and recommendations as follows:
   - The primary effluent flow distribution to the two biological reactors could be improved by reducing the length of the existing inlet weirs.
   - Two options to improve the flow distribution to the four secondary clarifiers include installing isolation gates a the end of the aeration basins or providing a new mixed liquor distribution box (preferred).
   - Return activated sludge(RAS) withdrawal from the RAS wet well and distribution to the biological reactors could be improved by installing a distribution box or using a flow meter with a control valve (preferred).
   - The final effluent pumping could be increased by lowering the pump discharge piping below the grates.

   M Mann presented her findings and recommendations on the ultraviolet disinfection as follows:
   - To be in compliance with current CT DEEP design guidelines (TR 16) it is required to treat the peak design flow with one UV bank out of service. Two additional UV channels will have to be installed.
   - Three alternatives were presented.

4. **Presentation by Wright-Pierce engineers of the findings and recommendations of their evaluation of the raw sewage pump station.**
   Christopher Pierce of Wright-Pierce presented the findings (presentation is attached) as follows:
   - Install new multi-rake screens with ¼-inch bar spacing.
   - Install three larger pumps and two smaller pumps all with variable speed controls.
   - Move septage receiving into a new building addition.
   - Miscellaneous improvements to the structure, odor control and ventilation systems
   - Enclose all the electrical equipment in a seprate room to comply with fire code.
   - Relocate existing standby power generator to the blower building or install a new self-contained generator near the blower building and sell the existing.

5. **Odor control update – W. Brink**
   W Brink stated that Jeff Pinnette of Wright-Pierce has recommended that the recirculation pump at the primary/gravity thickener scrubber be replaced with a smaller pump in lieu of using a VFD which was previously discussed. We have received quotes from two manufacturers for carbon canisters to treat odors from the influent sewer/ septage receiving and the rag and grit and sludge trailers. Jeff is getting quotes from a third manufacturer to meet purchasing requirements. D Capano asked if there were any odor complains, W Brink said that he has not receivedany for the past few weeks.

6. **Update on required operator certifications by other municipalities and WPCA's – W. Brink**
   W Brink provided a follow-up from a previous Committee discussion on operator certifications, i.e. should we require operators to receive a Class 2 and a Class 3 certification within a time limit. He contacted CT DEEP who avised that a few other municipalities had imposed time limits for operators to achieve Class 2 and Class 3 certifications and suggested that he talk to Norwich Public Utilities on their experience implementing the requirement. He advised the Committee on what he had learned, that there are advantages and disadvantages that need to be considered, He will discuss the issue with Rhudean Bull and present a recommendation to the Board.

7. **Update on engineering studies – P. Chakravarti**
   P Chakravarti updated the committee on the following:
   a. **Infiltration and Inflow (I/I) Analyses**
      The selection committee has selected CDM Smith for providing the services to evaluate and analyze the Infiltration& Inflow into the collection system. The scope of work and fee has been approved by the Technical Committee and CTDEEP and the agreement will be presented to the WPCA Board for approval at its December, 2014 meeting.

   b. **Evaluation of Sludge Degritting**
      The Task 4 of RFQ-619 to provide Engineering Services for Evaluation of the Sludge Degritting system has been awarded to Gannett Fleming. The contract will be presented to the WPCA Board for approval at its January, 2015 meeting.

c. **Arc Flash Analyses**
The selection committee for RFQ-650, Arc Flash Analysis has selected three firms namely (1) Tighe & Bond, (2) CDM Smith (3) Hazen & Sawyer for interviews. The interviews are scheduled for December 9, 2014.

8. Update on construction projects – P. Chakravarti

P Chakravarti gave the committee an update on the following:

a. Soundview Avenue Sewer Lining
All of the lining of the sewer line is complete. The contractor has removed the bypass piping and is working on restoring the trenches at the intersections. The lawn areas in the park will be restored in spring 2015.

b. **Raw Sewage Pump Station pipe supports replacement**
The contractor, Nutmeg Utilities has provided the submittals for the materials which have been approved. The fabrication submittals for the pipe supports are still due.

c. **UV tank walkway replacement**
The bids for replacing the elevated walkway at the UV tank have been received. The low bidder is Specialty Construction Systems, Inc at $89,720.00. A meeting with the contractor is to be scheduled to discuss the scope of work as bid.

9. Old Business

D Capano asked if the communication signals with the remote pump stations were all working OK. P Chakravarti mentioned that he is not aware of any issues. D Capano mentioned that Knapp Engineering technician is scheduled to be at each pump station to re-program the radio-transmitters next week and he intends to visit the stations with WPCA Electrician Walter Michalsky

10. New Business

There being no other issues to discuss Ed Kelly made a motion to adjourn the meeting, seconded by D Capano; motion carried 2-0-0. The meeting was adjourned at 7:55 pm.

Stamford WPCF - RFQ No. 619 Task 2 – Flow Distribution to Secondary Clarifiers – Final PDR Workshop

December 3, 2014

STAMFORDWPCA

HAZEN AND SAWYER
Environmental Engineers & Scientists

Meeting Agenda

- Goals for the Meeting
- Progress since last meeting
- Hydraulic Capacity Evaluation
- Aeration Basin Flow Distribution
- Secondary Clarifier Flow Distribution
- RAS Distribution
- Effluent Pumping
- UV Disinfection

Goals for the Meeting

- Review final design report recommendations
- Receive final Owner comments
- Finalize selection of alternatives

Progress Since Last Meeting

- Survey of key hydraulic features completed
- Reconciled survey datums
- Reviewed missing O&M manual info
- Updated hydraulic model
- Performed detailed CFD modeling at aeration basin influent
- Completed cost evaluations
- Submitted final draft of PER

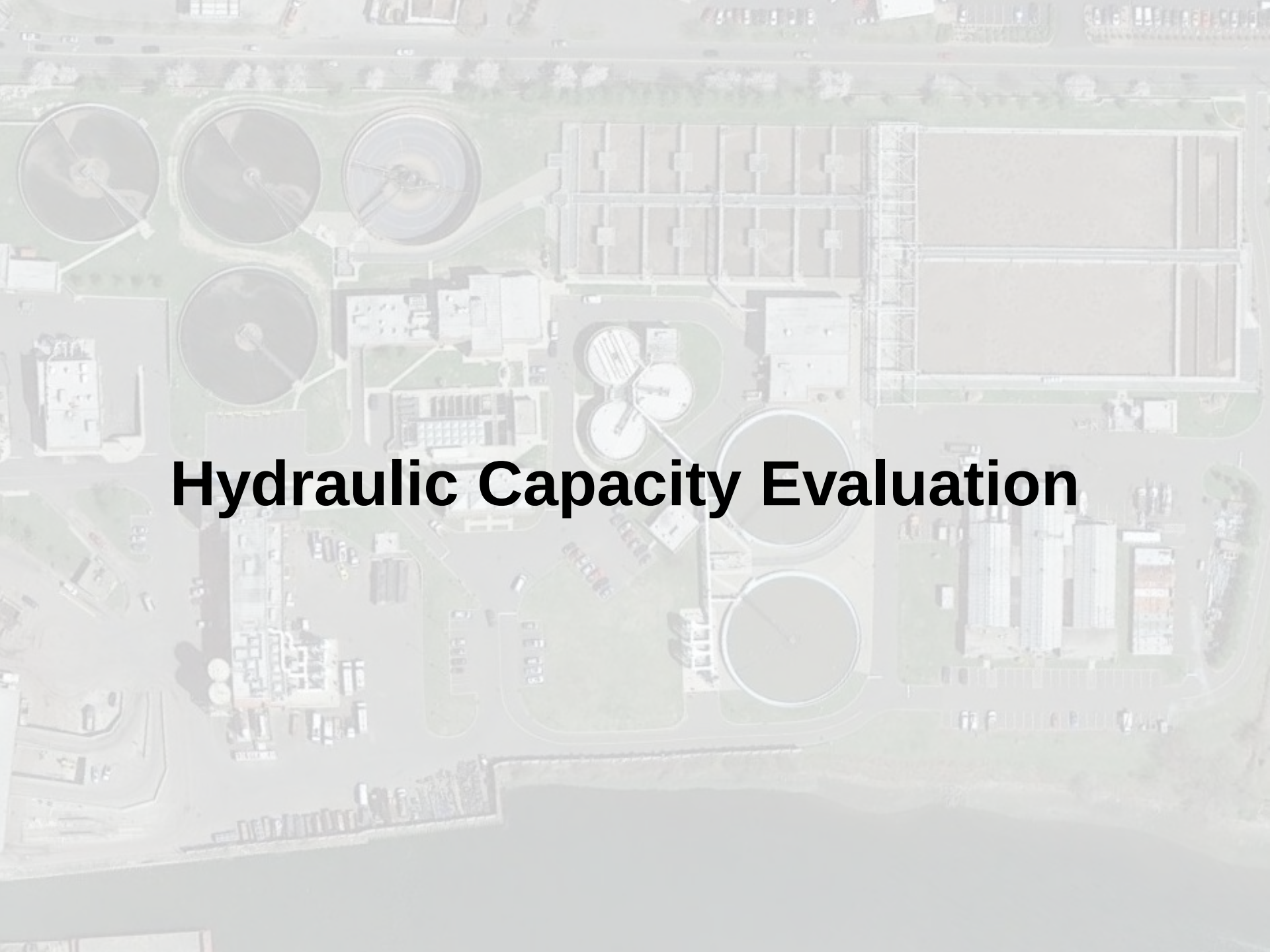

Hydraulic Capacity Evaluation

Survey Datum Reconciliation

- Current drawings based on Stamford Datum
- Per Surveyor, Stamford Datum is 4.74’ lower than NAVD 88 datum
- Tidal information established based on two tidal gages that “bracket” Stamford and positively tied to NAVD88 datum
- 100-Yr Flood Level = 10.74’ (Stamford Datum)
- Mean Higher High Tide Level = 8.49’ (Stamford Datum)

Hydraulic Capacity Evaluation

- Updated hydraulic profile calculations between primary clarifiers and discharge point based on new survey and O&M info

Flow Condition	Design Flow (mgd)	RAS Flow (mgd)	NRCY Flow (mgd)
Annual Average Flow	24	18	80
Peak Wet Weather Flow	68	18	80

Description	Hydraulic Capacity
Primary Clarifier Effluent Weirs to AB Influent Weirs	56 mgd
AB Influent Weirs to Mixed Liquor Distribution Weir Gates	63 mgd
Mixed Liquor Distribution Weirs to SC Effluent Weirs	57 mgd
SC Effluent Weirs to UV Disinfection Effluent Weir Gates	52 mgd
UV Disinfection Effluent Gates to Stamford Harbor by Gravity	15 mgd

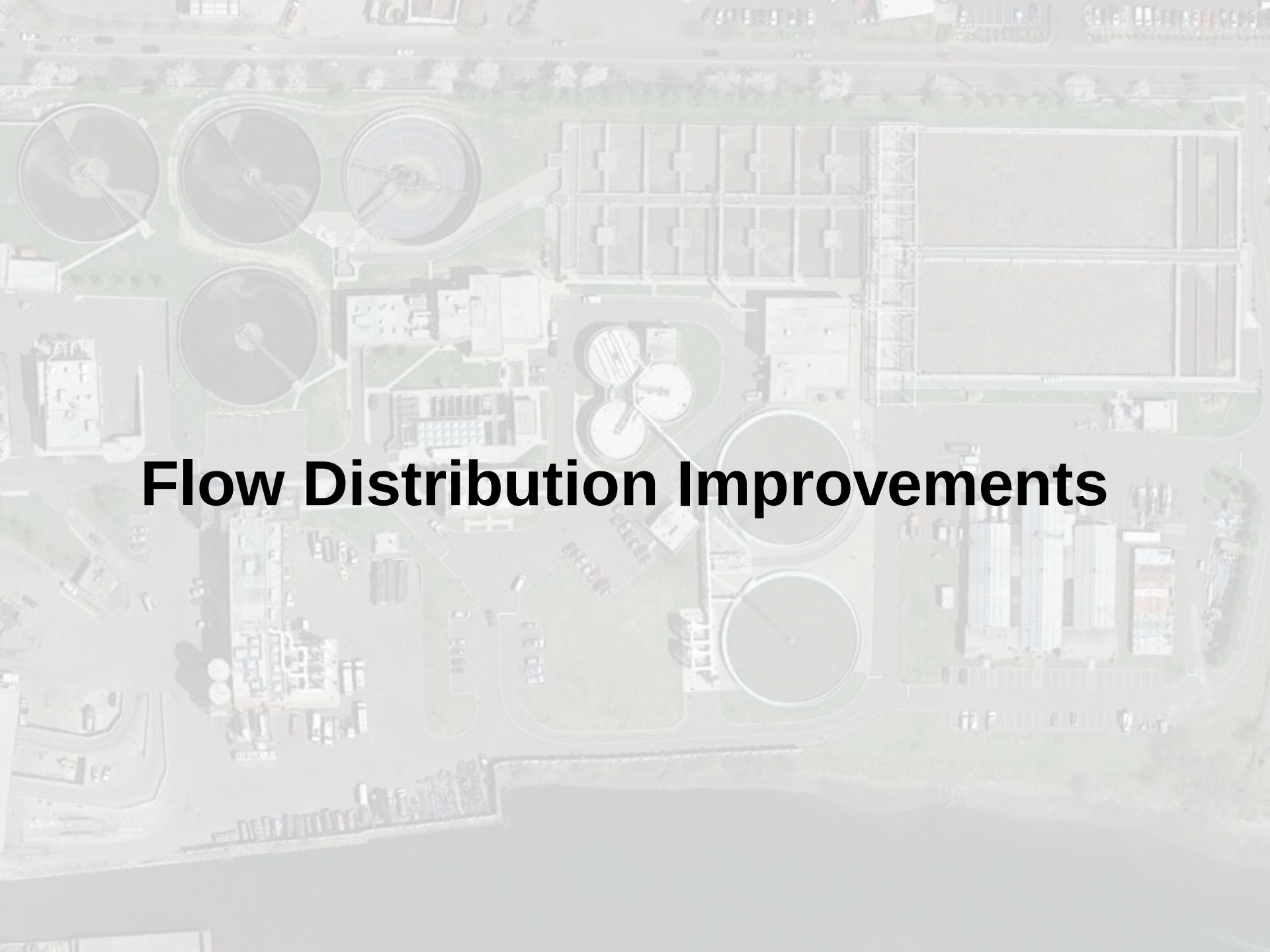

Flow Distribution Improvements

Goals for Flow Distribution Improvements

- Flow to parallel process units within 5%
- Maintain distribution across full range of plant flows
- Provide for automatic redistribution of flow when a unit is taken out of service
- Three components:
  - Distribution of Primary Effluent to Aeration Basins
  - Distribution of Mixed Liquor to Secondary Clarifiers
  - Distribution of RAS from SC to ABs

Aeration Basin Influent Flow Distribution

- NRCY Baffle
- Approach velocity >3 fps at peak flow
- Performed CFD modeling to optimize design

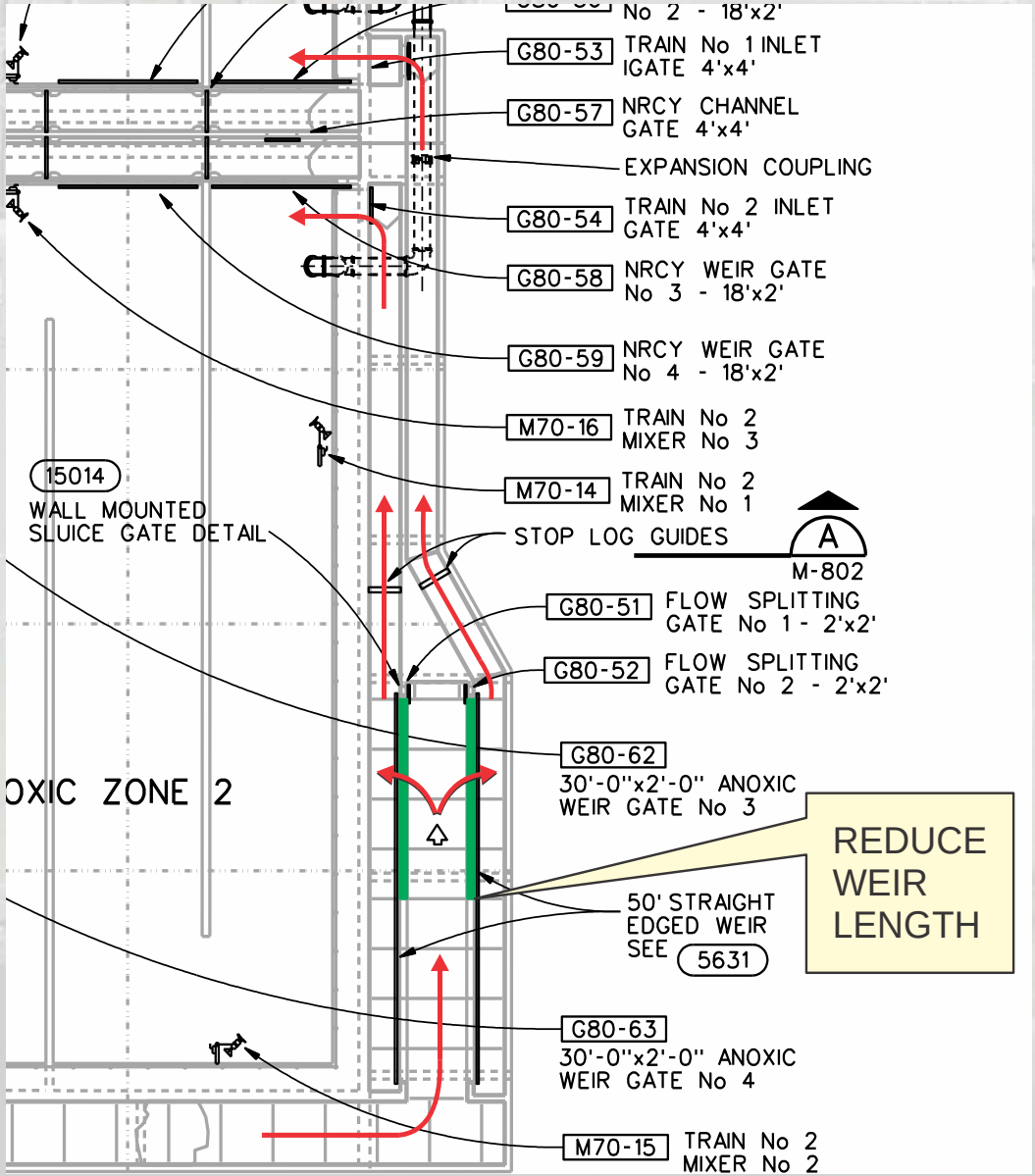

Aeration Basin Influent Flow Distribution

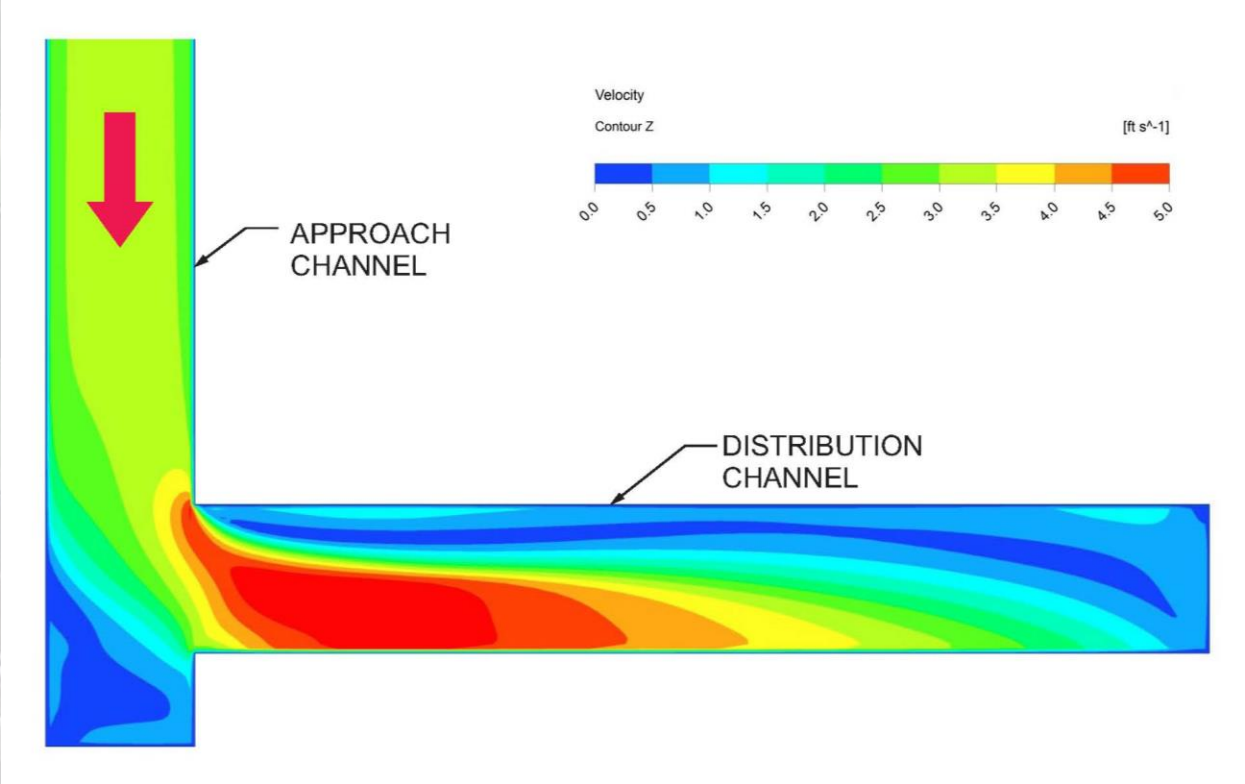

Weir Configuration	Distribution at Peak Flow
Current Configuration	95.8%
Shorter Weir Length	96.1%

Impact of Influent Weir Adjustments

- Survey indicates a variation in weir elevations of ~1-1/2 inches
- Head over weir at average flow is ~ 3 inches
- Leveling of weirs will likely have greater effect on distribution than other improvements recommended as result of by CFD modeling

Aeration Basin Influent Flow Distribution Cost Opinions and Recommendations

Improvement Alternative	Cost
Shorten Weir Length	$30,000
Install NRCY Baffle	$20,000
Weir Adjustments	$10,000

- Consider MOPO issues
- Recommendations:
  - Level weirs – registered surveyor verification
  - Incorporate other improvements while channel is out of service

Secondary Clarifier Flow Distribution

- Hydraulic limitations

Flow Path	Flow Capacity (mgd)*
Secondary Clarifier 1	15.9
Secondary Clarifier 2	17.2
Secondary Clarifier 3	14.3
Secondary Clarifier 4	17.3

* Assumes 18 mgd RAS

- Options for improving distribution:
  - Option 1 – Use existing weir gates at aeration basin effluent
  - Option 2 – New distribution box

Option 1 – Existing Weir Gates

- Add Isolation Gates
- Shorten Weirs
- MOPO Issues

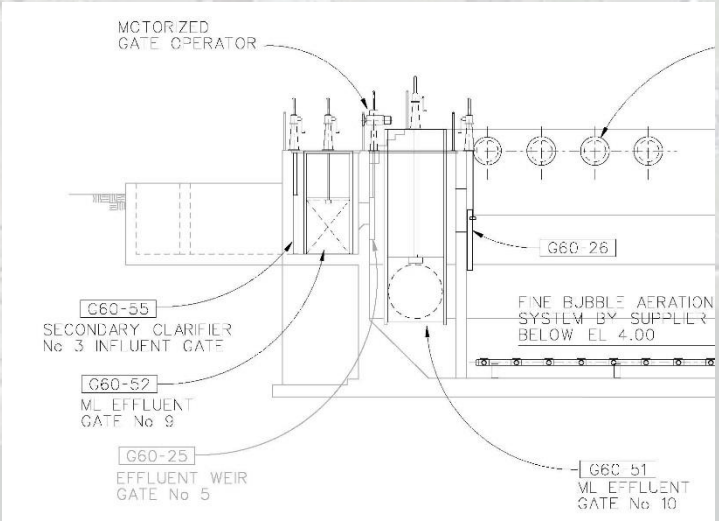

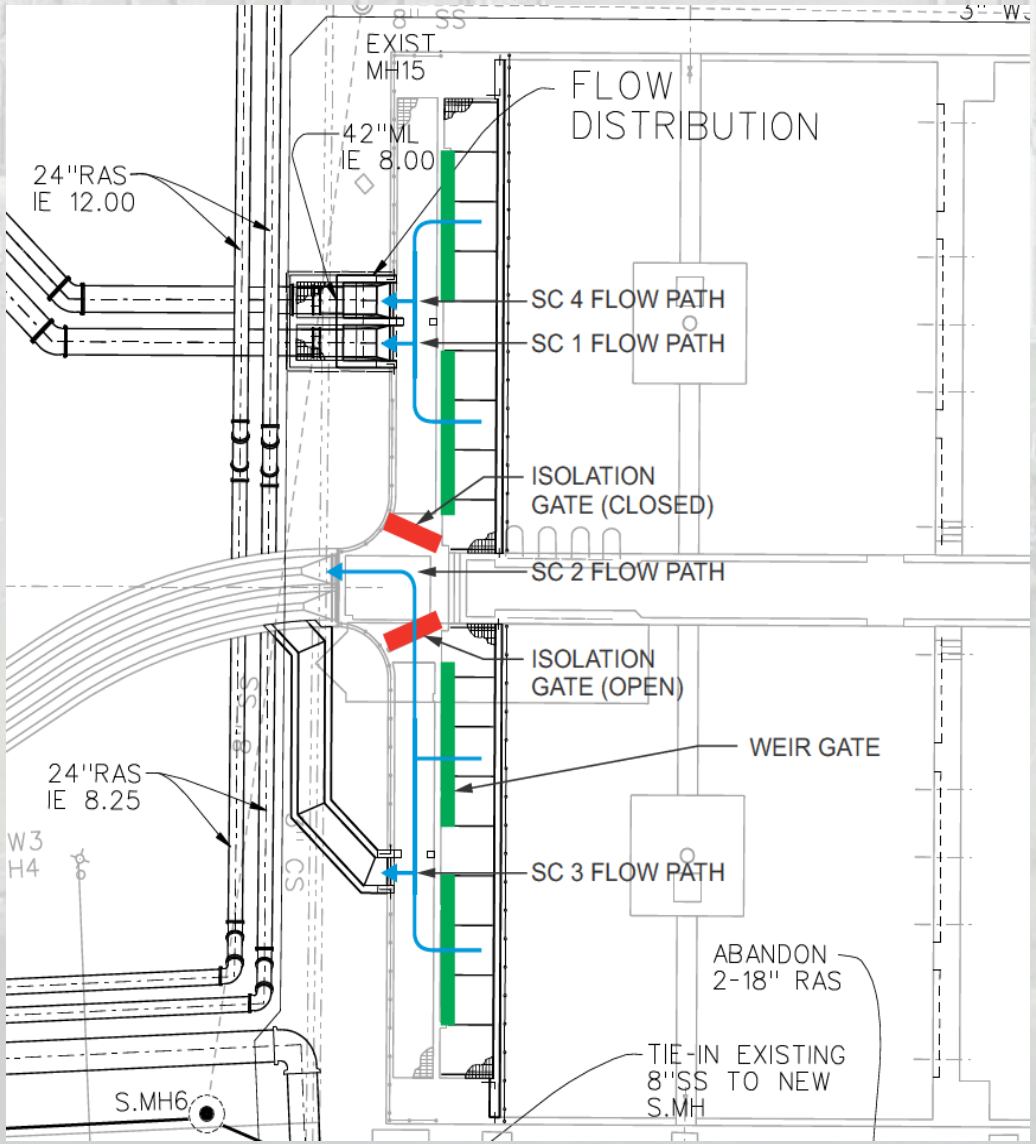

Option 2 - New ML Distribution Box

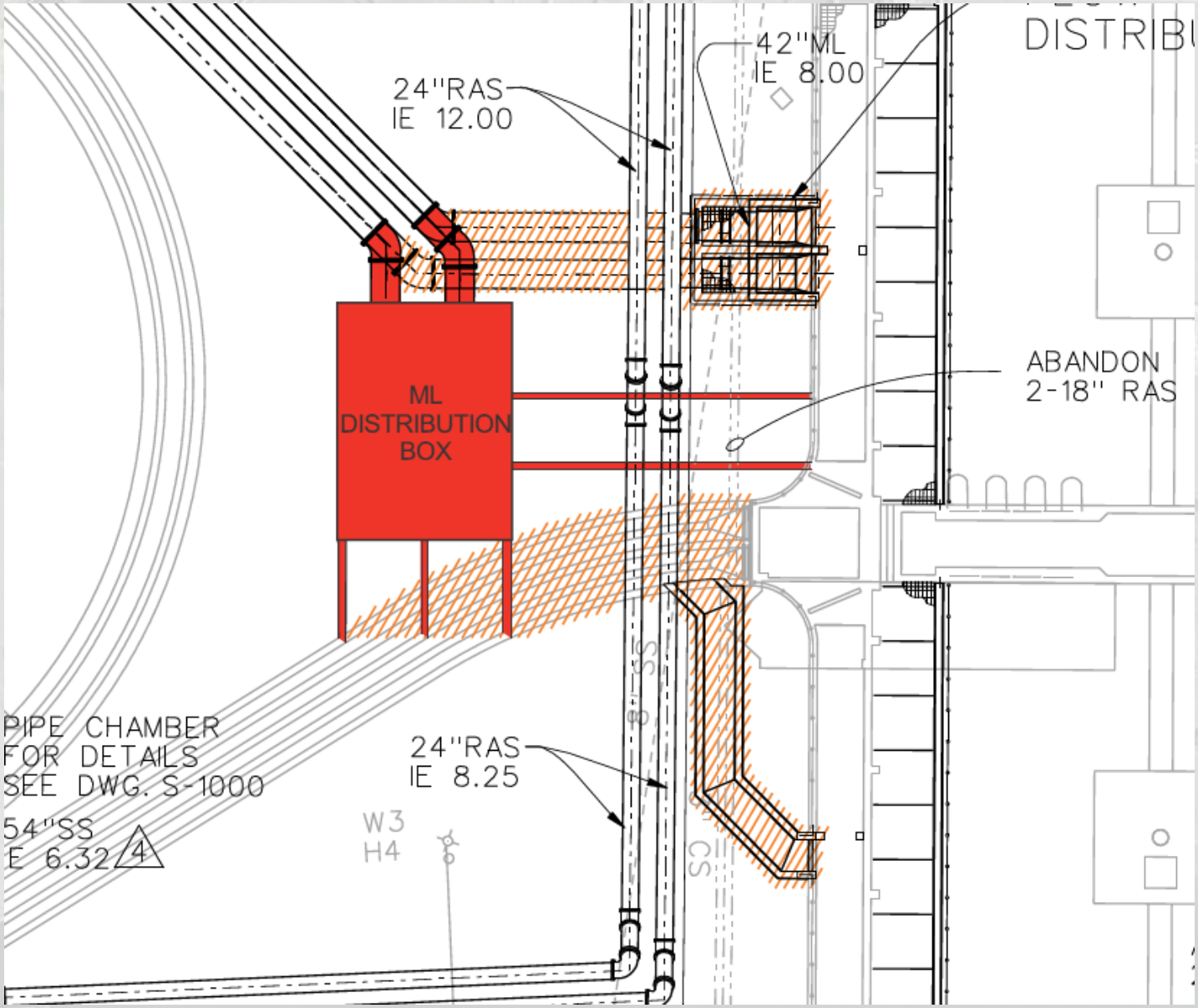

Mixed Liquor Distribution Box

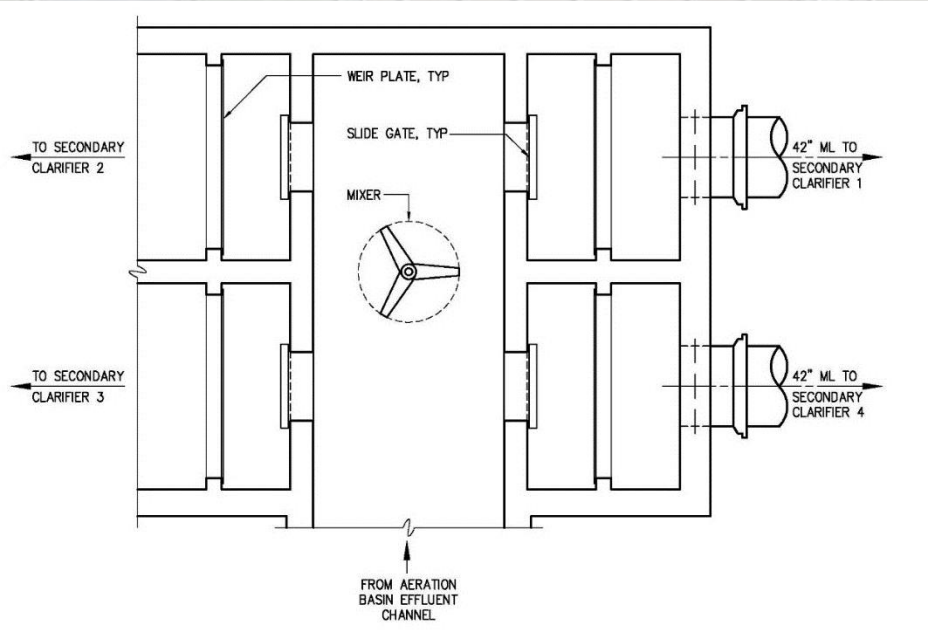

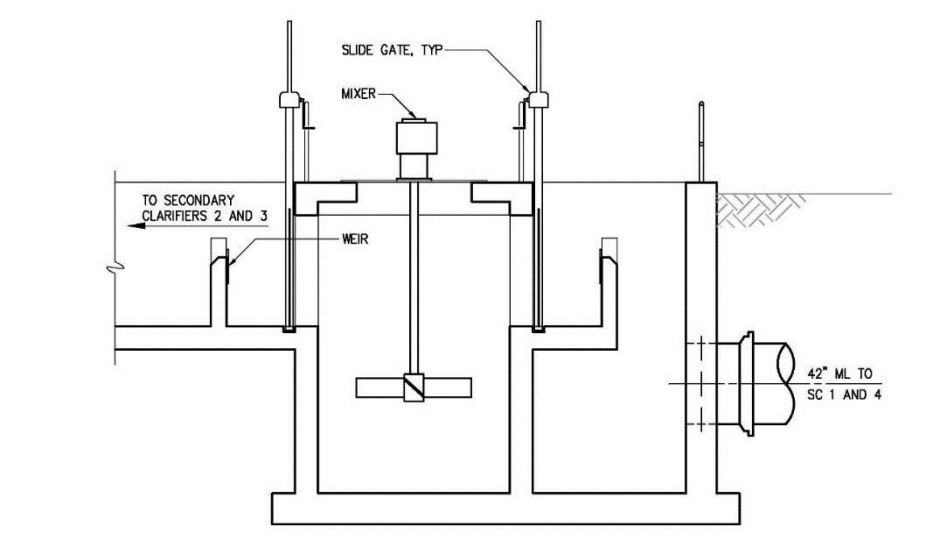

Secondary Clarifier Flow Distribution Cost Opinions and Recommendations

Distribution Alternative	Cost
Alternative 1: Use Existing Weir Gates	$460,000
Alternative 2: New Distribution Box	$590,000

- Recommendation
  - Provide New Distribution Box

RAS Withdrawal / Distribution Improvements

Goals for RAS Withdrawal / Distribution Improvements

- Metering of RAS flow from each clarifier
- Balanced RAS withdrawal from each clarifier
- Distribution of RAS to aeration basins
- Automated RAS control across full range of plant flows

Current RAS Pump/Piping Configuration

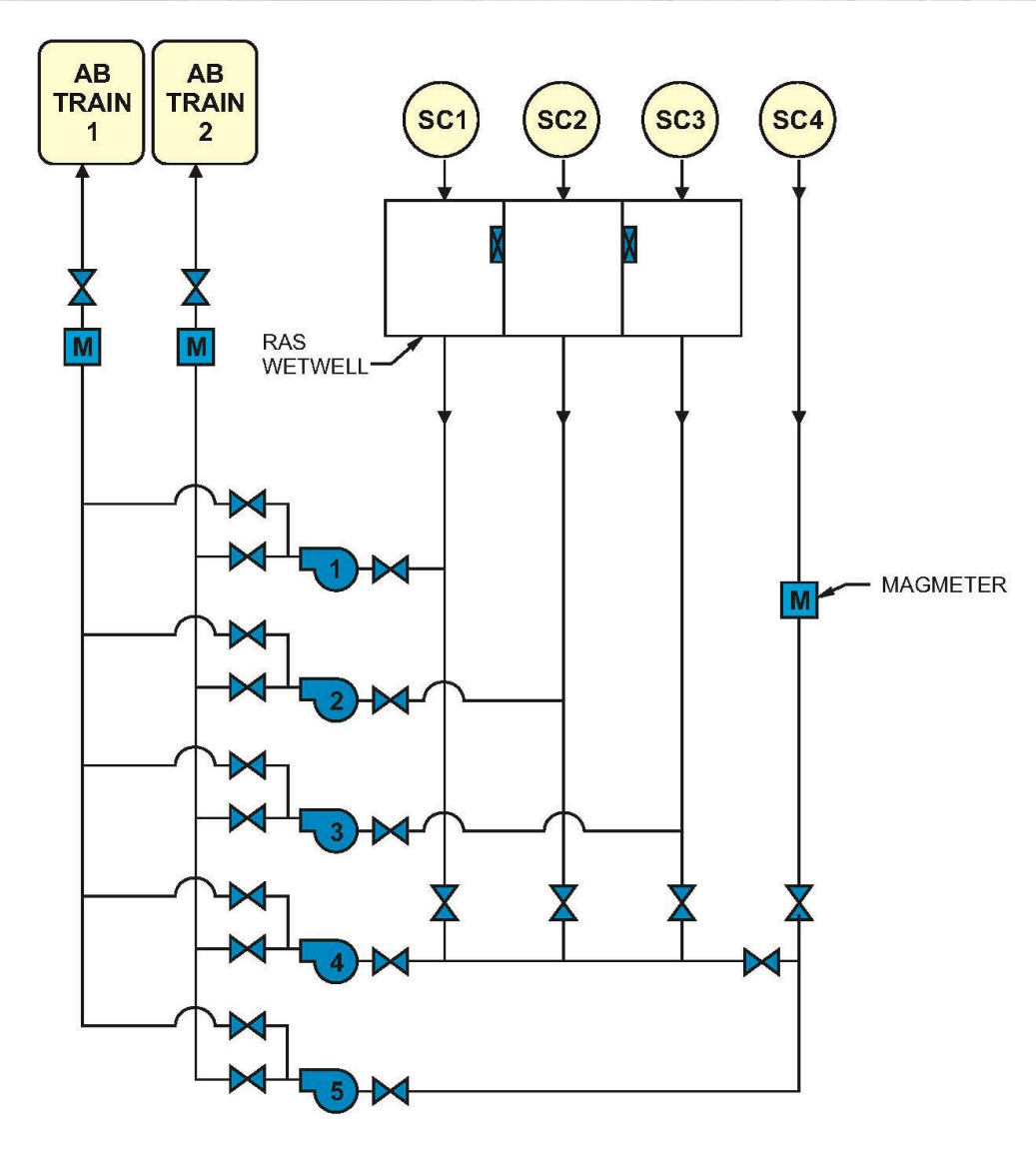

RAS Distribution Options

Weir Split

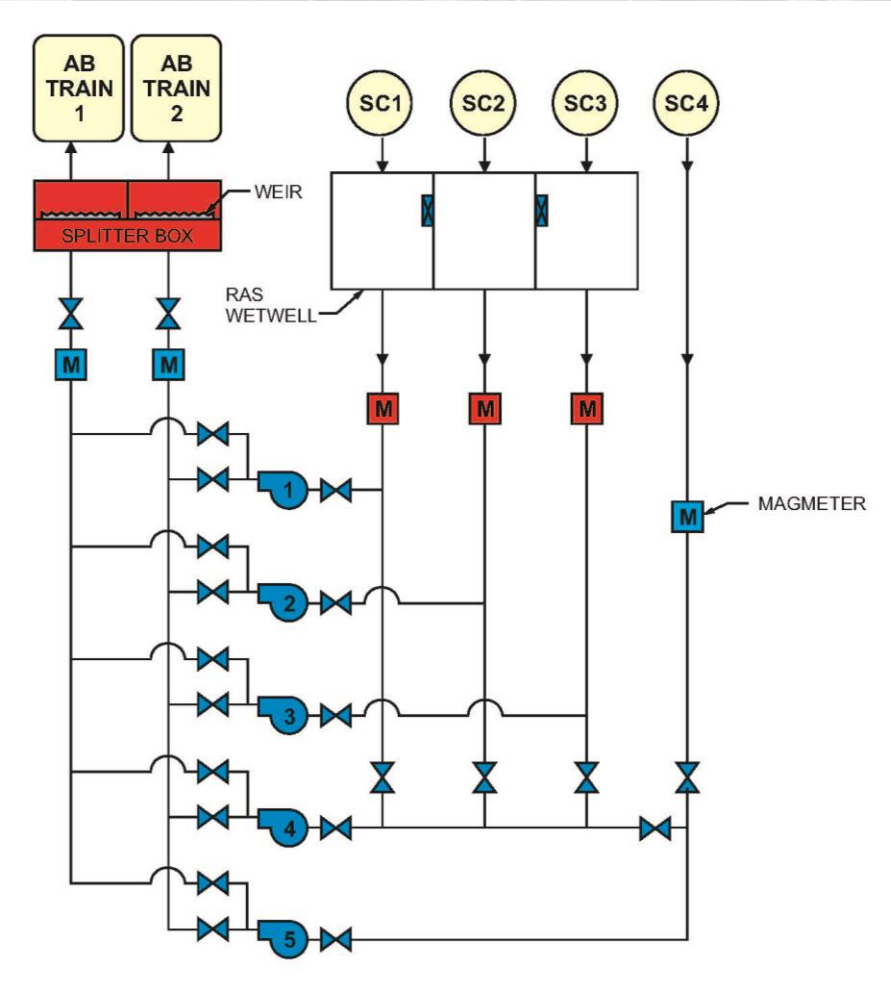

Control Valve

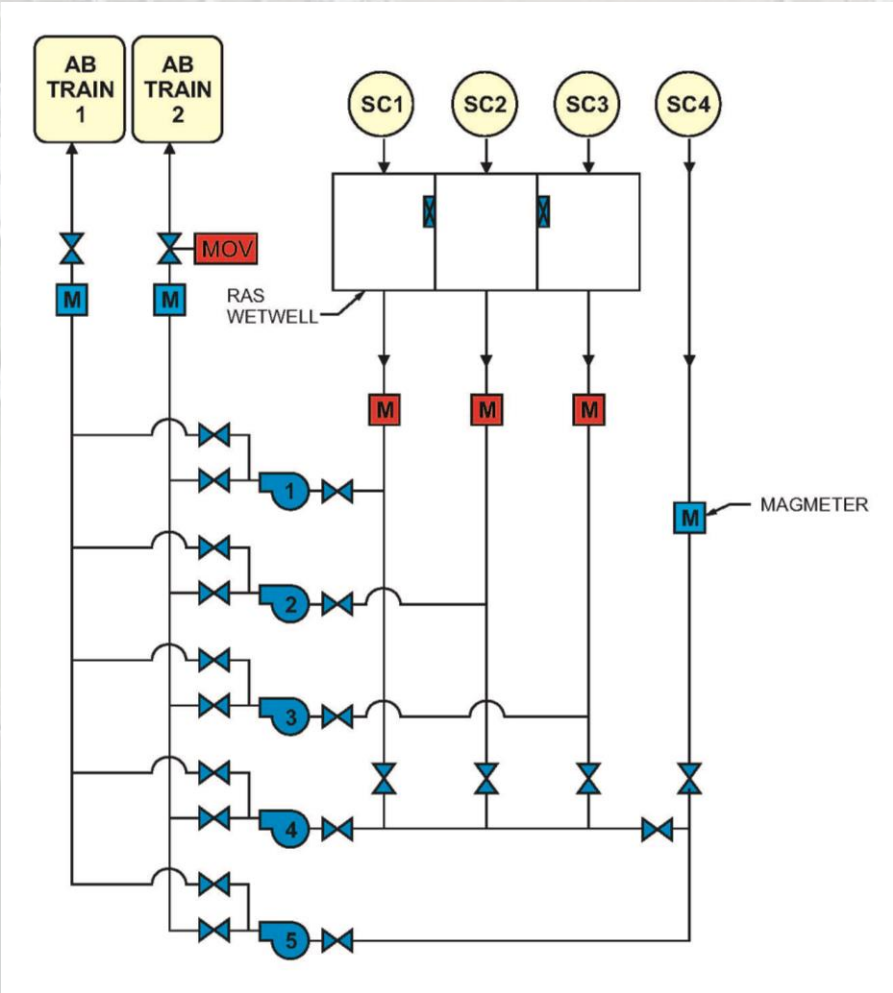

Return Activated Sludge Improvements Cost Opinions and Recommendations

Improvement Alternative	Cost
RAS Metering Improvements	$150,000
RAS Distribution Improvements	
Alternative 1: RAS Distribution Box with Weir Split	$130,000
Alternative 2: Control Valve	$40,000

- Recommendations
  - Add flowmeters for SC 1 , 2, & 3
  - Add control valve and strategy to control RAS distribution

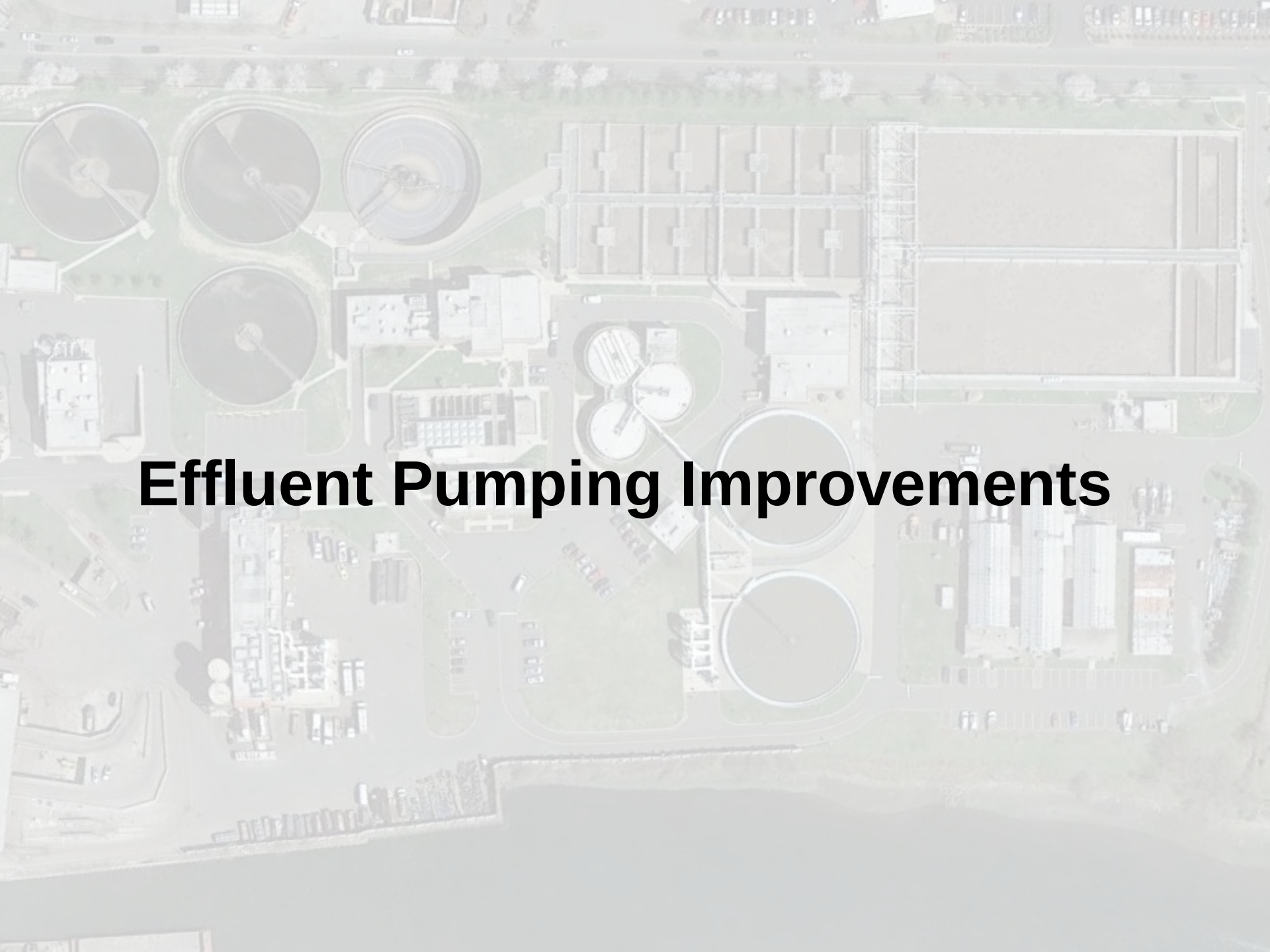

Effluent Pumping Improvements

Effluent Pumping Improvements

- Current Problems
  - Inadequate pumping capacity (inadequate pump TDH)
  - Motor overload conditions above ~54 Hz (90%)
  - VFD inadequate for current motor size

Rated Pump Capacity	23,600 gpm (34 mgd) at 16 ft
Max Operating Speed	700 rpm
Motor HP	140 HP
Motor Amp Rating at 140 hp	200 amps
Estimated Motor Amp Draw at Rated Capacity	170 amps
VFD Amp Rating	170 amps (per mfr)
Rating of wiring between VFD & Motor	230 amps (rating of #4/0 cable)

Effluent Pumping - Current Conditions

Free discharge at low flows

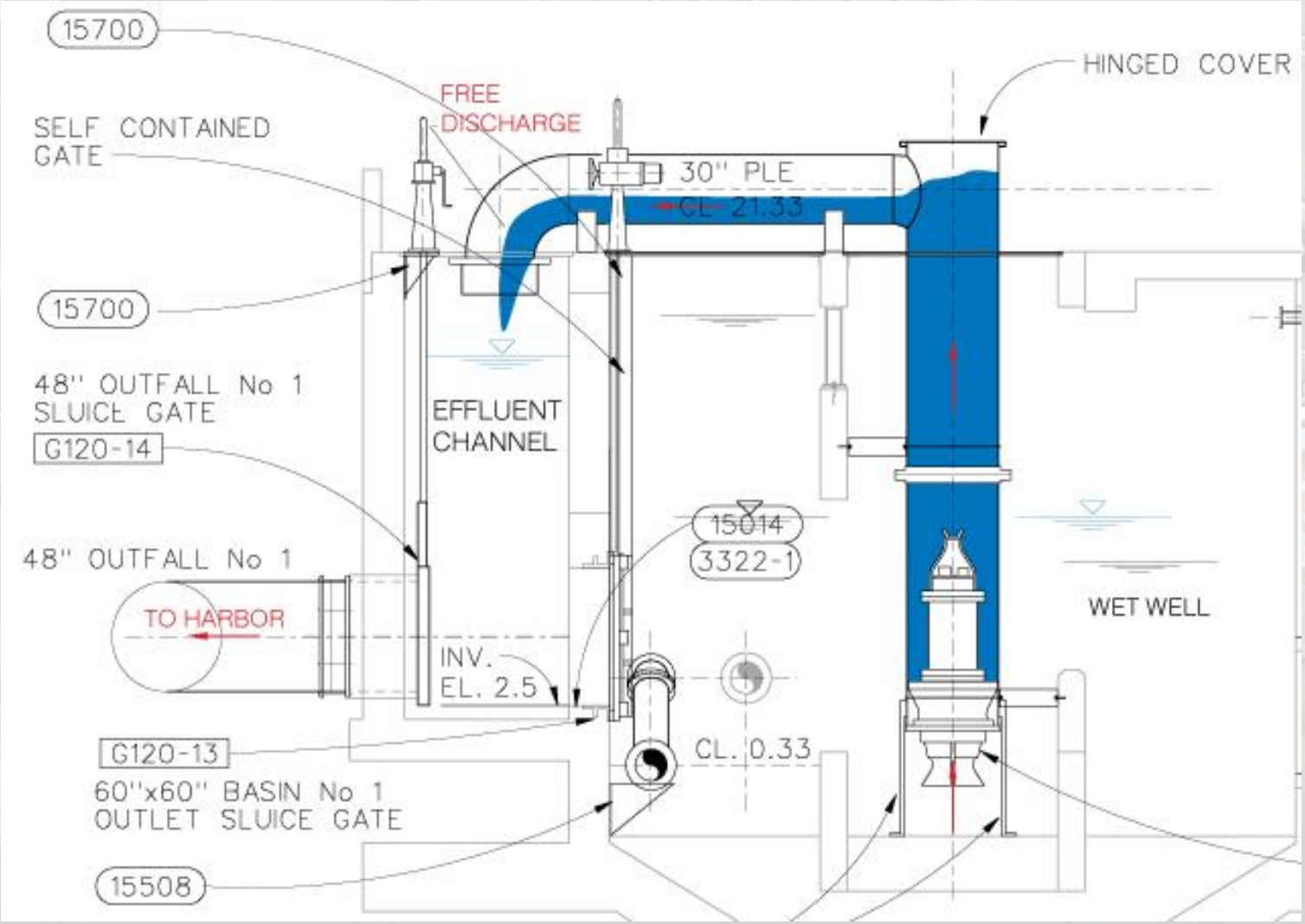

Effluent Pumping - Current Conditions

Potential for trapped air at higher flows

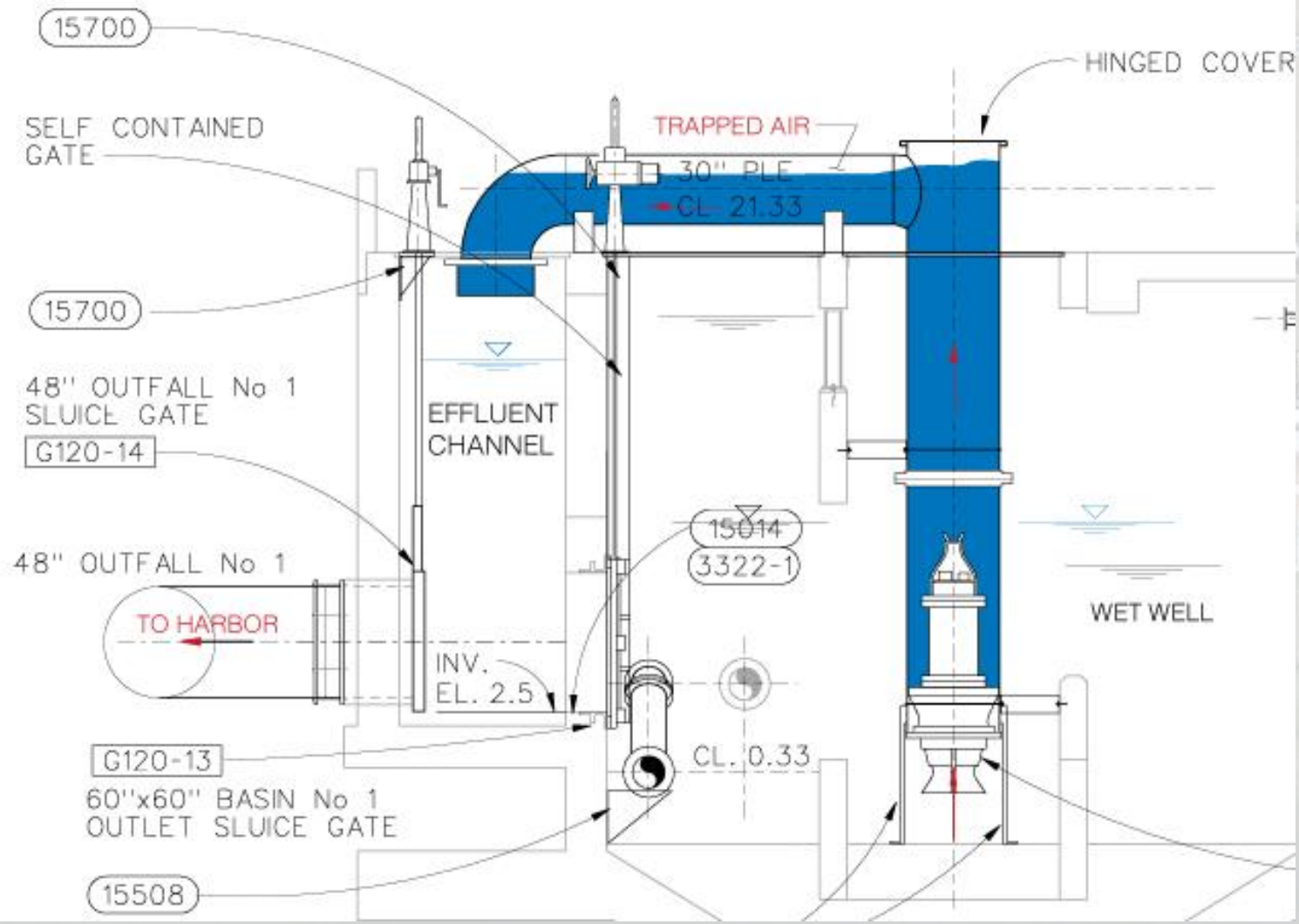

Effluent Pumps – Pump & System Curves

Operating conditions with full siphon and no siphon

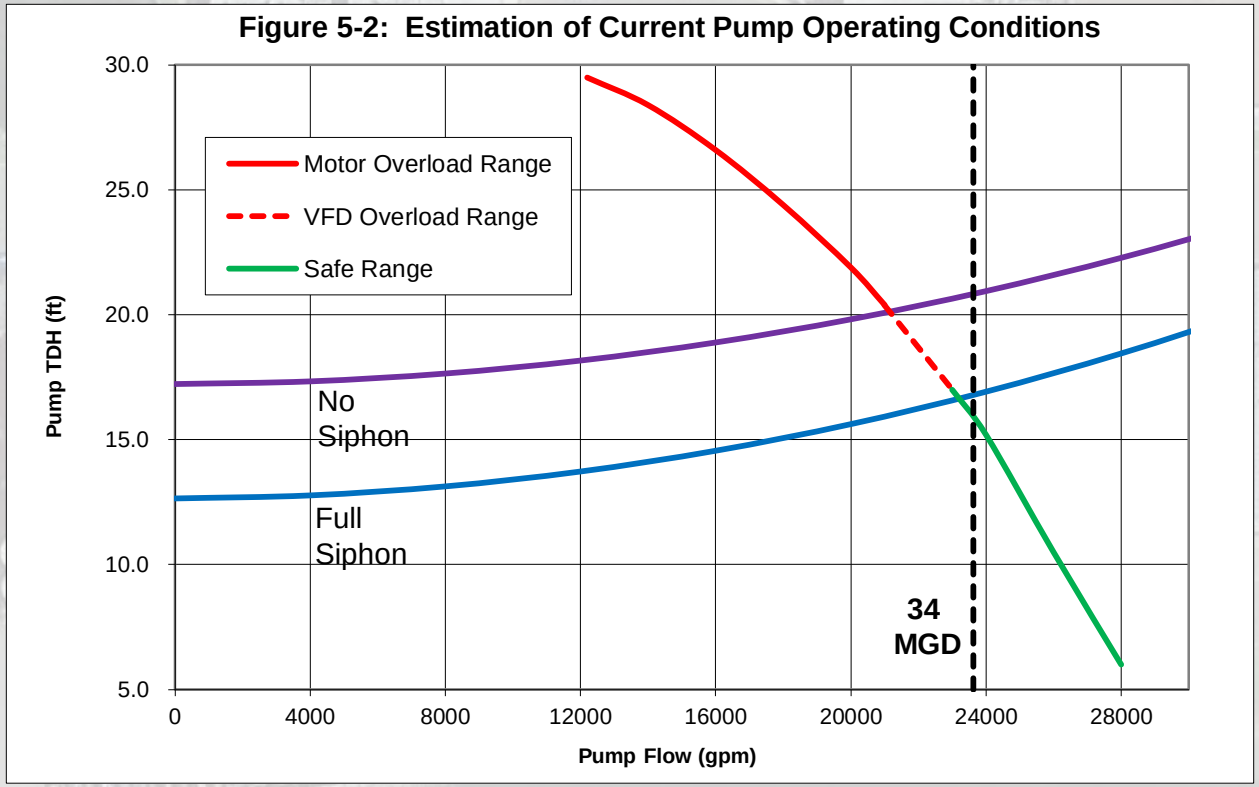

Effluent Pumping Improvements Potential Solutions

- Address potential air binding in pump discharge piping
- Optimize wet well level (w/o impacting UV)
- Lower pump discharge line
- Pump/VFD replacement

Effluent Pumps with Lowered Discharge

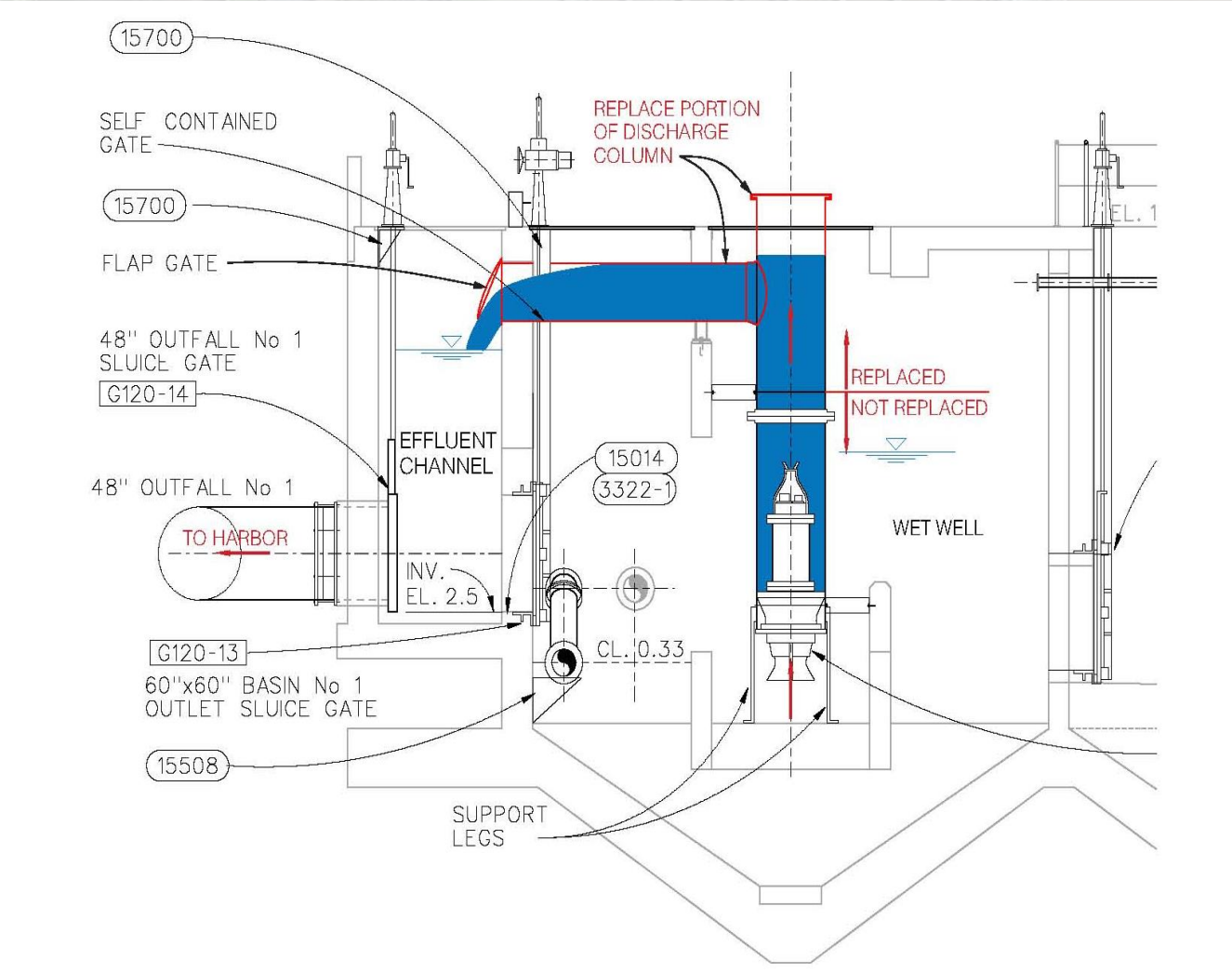

Effluent Pumping - Pump & System Curves

Operating conditions with lowered pump discharge

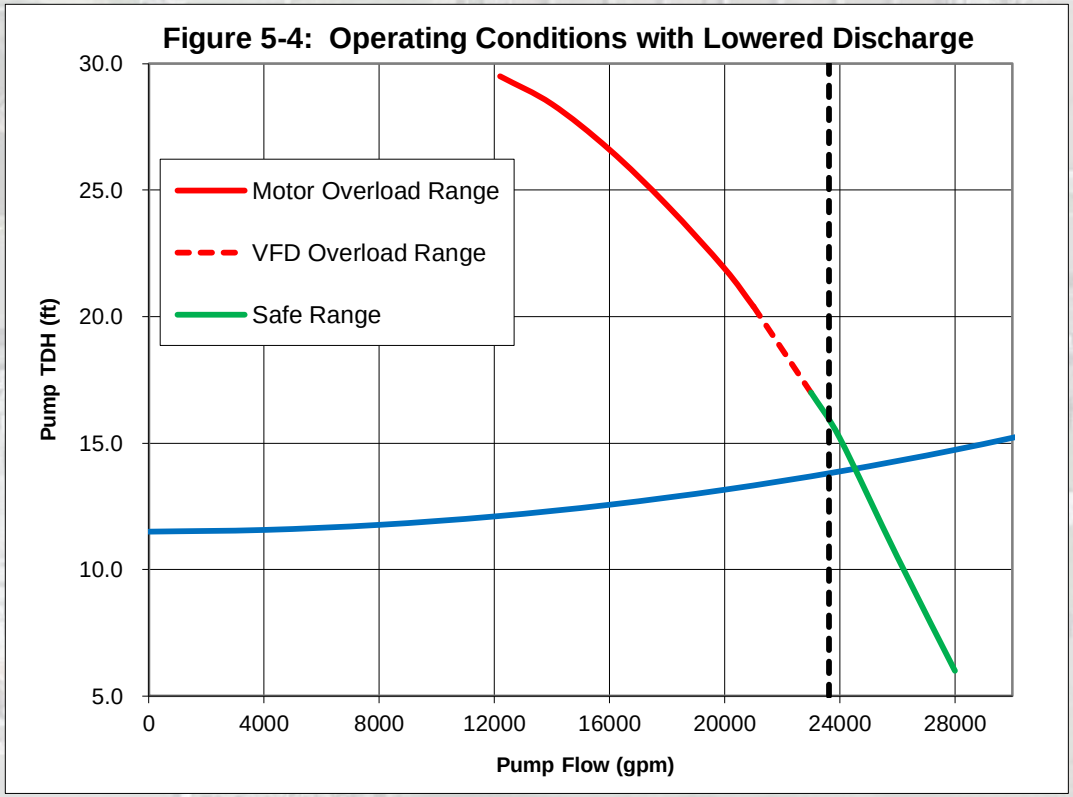

Effluent Pumping Improvements Cost Opinions and Recommendations

Improvement Alternative	Cost
Alternative 1: Lower Pump Discharge	$350,000
Alternative 2: Pump & VFD Replacement*	$1,600,000

* Stantec Equipment Costs + Construction costs

- Recommendations:
  - Try the simple fix – install air relief valve on one pump and perform field tests. Optimize wet well level during field testing
  - If insufficient, consider lowering pump discharge line

UV Disinfection

UV Disinfection Study Goals

- Evaluate water quality data to set design criteria to meet new permit limits
  - Incorporate standby bank (or channel) as required by TR-16
- Identify and compare UV systems suitable for limits and hydraulics
- Recommend steps to improve performance of existing system until new is installed

UV Disinfection NPDES Limits

	Fecal Coliform Now #/100mL	Fecal Coliform By 10/2016 #/100mL	Entero-coccus Now #/100mL	Entero-coccus By 10/2016 #/100mL
Monthly Geom. Mean	200	88	--	35
Monthly % samples >260	--	10%	--	--
Weekly Geom. Mean	400	--	--	--
Maximum	2400	2400	--	500

Also: UV dose ≥ 30 mJ/cm^2 continuously

Water Quality Data
UV Transmittance Jan 2012 – Aug 2014

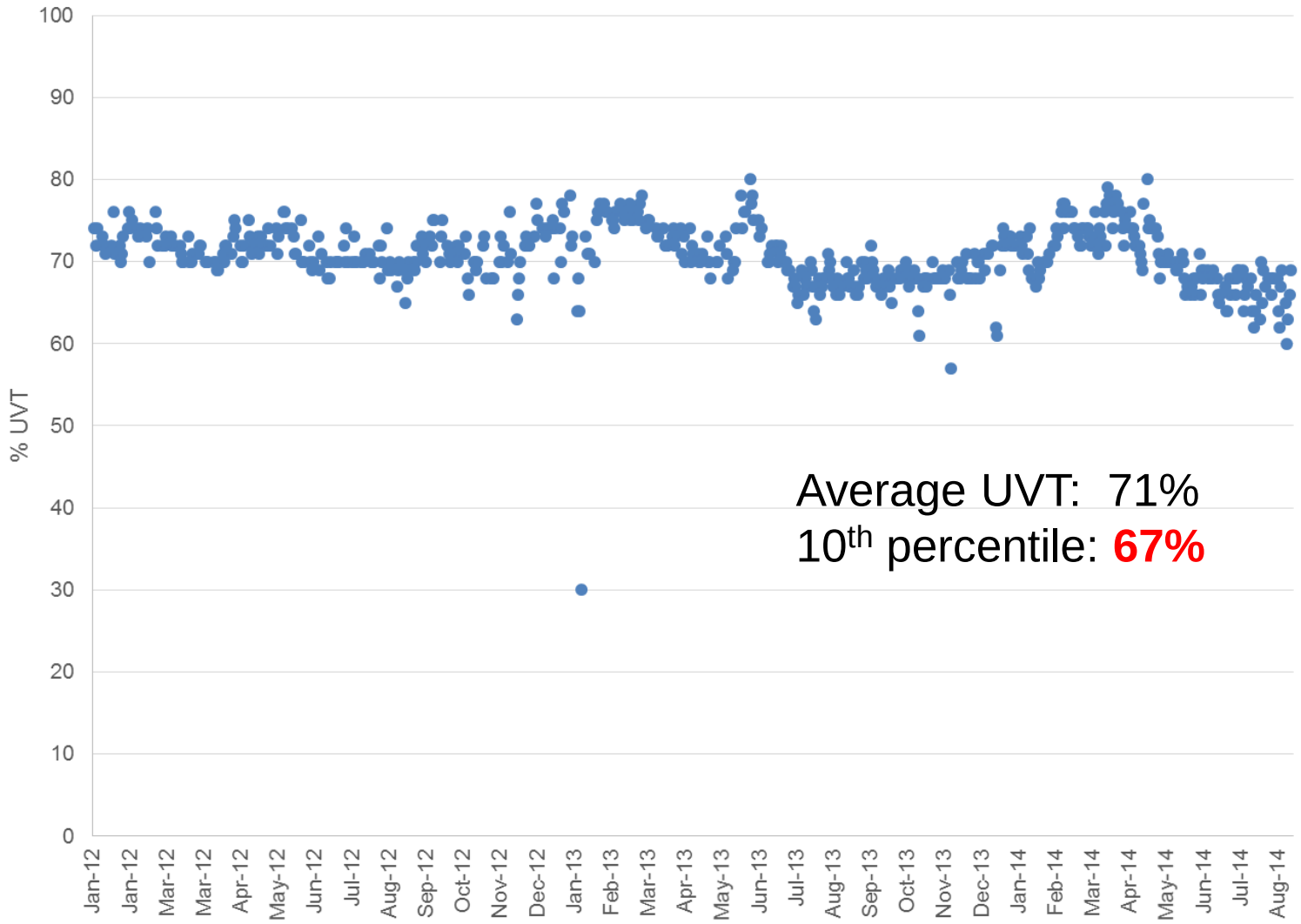

Water Quality Data
Pre-UV Fecal Coliform and Enterococcus

	Fecal coliform MF method (#/100mL)	Fecal coliform IDEXX method (MPN/100mL)	Entero-coccus MF method (#/100mL)	Entero-coccus IDEXX method (MPN/100mL)
Number samples	76	14	50	16
Geom. mean	5,337	6,903	2,462	1,175
Maximum	69,000	41,060	8,364	7,209

1.9-log inactivation Enterococcus (2462 >>> 35)
or 1.9-log inactivation fecal coliform (6903 >>> 88)
<u>+ 0.5-log inactivation safety factor</u>
= 2.4-log inactivation design target

Water Quality Data
Collimated Beam Tests (Lab doses)

Dose (mJ/cm2)	Fecal Coliform (cfu per 100 mL)		Enterococcus (cfu per 100 mL)	
	May 2013	**August 2014**	**May 2013**	**August 2014**
0	5000	12,600	1200	2180
5	200	1740	100	1030
10	20	38	15	145
15	<1	5	2	19
20	<1	<2	1	5
30	<1	<2	1	5
40	NA	<2	NA	3

10 mJ/cm^2 needed to meet 88 /100mL fecal coliform
15 mJ/cm^2 needed to meet 35 /100mL Enterococcus
2.4-log x 8 mJ/cm^2 / log ~ 20 mJ/cm^2 dose in lab
~ 30 mJ/cm^2 MS2 RED
~ >60 mJ/cm^2 theoretical dose

Design Criteria for New UV System

Average flow	24 mgd
Maximum day flow	46 mgd
Peak hour flow	68 mgd
UV dose	30 mJ/cm^2 MS2 RED at 68 mgd in 3 channels
UV transmittance	65% minimum
Number of channels	4 = 3 duty + 1 standby
Banks per channel	2 minimum
Channel width	61 inches (match existing)
Channel length	(2) channels at 62 feet, (1) at 36 feet long
Level control	Motorized weir gate in each UV channel
Water depth	Up to 46 inches at lamps (match existing)

TR16 Reliability: "Must be capable of delivering the design dose at peak instantaneous flows with one bank of modules out of service." Effectively requires a standby channel, or bank per channel.

UV Equipment Alternatives

- Xylem/Wedeco TAK55L, Duron
- Trojan UV3000Plus
- Ozonia Aquaray 3X
- Trojan UVSigna

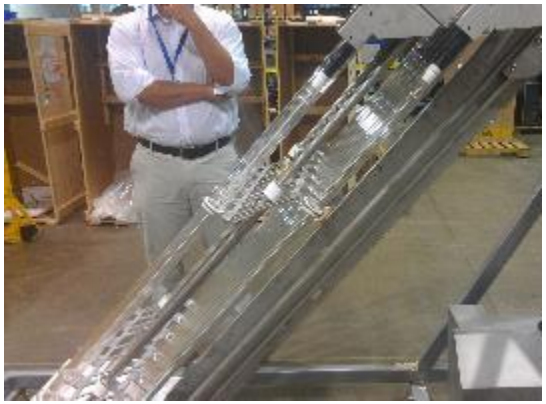

Alternative UV System Configurations

	Alternative 1	**Alternative 2**	**Alternative 3**
Manufacturer	Xylem/Wedeco	Xylem/Wedeco	Trojan
System	TAK55L	Duron	UV3000Plus
Dose (MS2 bioassay)	--	30 mJ/cm^2	35 mJ/cm^2
Dose (PSS calculated)	47 mJ/cm^2	--	--
Number channels	2 new, 2 existing	4	4
Banks per channel	2	4	2
Lamps per bank	108	24	120
Lamps per channel	216	96	240
Lamps total	432 new, 864 total	384	960
Channel width at lamps	61 inches	58 inches	60 inches
Water depth nominal	46 inches	42 inches	32 inches
Channel length, min.	32.5 feet	36 feet	30 feet
Power, lamps and ballasts only	136 kW new 279 kW total	256 kW	240 kW
Power input per lamp	315 watts	660 watts	250 watts
Head loss	2.0 inches baffle 1.3 inches lamps	2.0 inches baffle 3.9 inches lamps	Baffle optional 2.5 inches lamps
Lamp warranty	14,000 hours	14,000 hours	12,000 hours

UV System Preliminary Cost Estimates

	Alternative 1 TAK55L	Alternative 2 Duron	Alternative 3 UV3000Plus
Construction costs (2014 dollars)			
UV equipment	740,000	1,686,000	1,684,000
Total	**$2,700,000**	**$5,200,000**	**$5,200,000**
Annual costs (2014 dollars)			
Power	39,000	31,000	31,000
Lamps	37,000	24,000	53,000
Labor	23,000	23,000	23,000
Total	99,000	78,000	107,000
20-year pres. worth	**$1,900,000**	**$1,600,000**	**$2,000,000**
Life cycle cost	**$4,600,000**	**$6,800,000**	**$7,200,000**

UV Disinfection Expansion Preliminary Schedule

Project Phase	Duration	Tasks
Basis of Design Report	3 months 1 month	Prepare draft report Client review and submit final report
Pre-Select UV System	2 months 2 months	Prepare draft and final bid packages Equipment bid period and evaluation
Pilot Test (if needed)	3 months	Field work, planning, and memo on results
Final Design	1 month 2 months 2 months 1 month	Submit 30% plans Submit 60% plans and specs Submit 90% plans and specs Submit Bid Ready Plans and Specs
Bid Period	1 month 2 months	Bid period from advertisement Evaluation, Award, and Notice to Proceed
Construction	16 months	6 months for submittals and fabrication, plus 5 months per pair of channels
Preliminary Total	**36 mon.**	

Existing UV System Performance

- Meets new limits at average flows
  - Dose at 8-12 mgd/channel > 50 mJ/cm^2 PSS
- Can exceed new permit limits at high flow
  - Dose at 23 mgd/channel ~ 47 mJ/cm^2 PSS
  - Dose at 34 mgd/channel ~ 32 mJ/cm^2 PSS
  - 32 mJ/cm^2 PSS < 30 mJ/cm^2 MS2 RED
- Algae at inlet baffle can affect disinfection
  - Covers on UV influent channel or clarifier weirs would reduce algae

Existing UV System
Reduce Risk of Low Level Shutdowns

- Low level shutdown affects all UV systems
  - Personnel safety
  - Equipment protection
- Potential improvements
  - Adjust delay timer in interlock
  - Lower level probe for interlock (may also add covers)
  - Optimize weir gate control program
  - Move level sensors for weir gate control
  - Evaluate weir gate actuator speed, replace if needed

Thank you!

Raw Sewage Pumping Station Evaluation

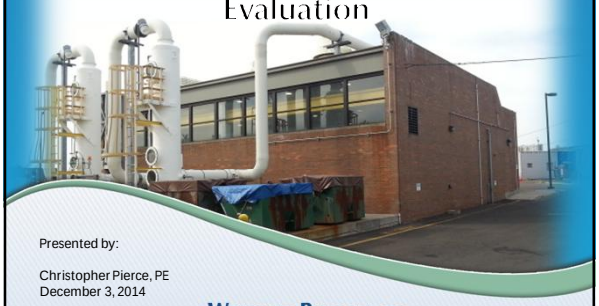

Presented by:

Christopher Pierce, PE
December 3, 2014

WRIGHT-PIERCE
Engineering a Better Environment

Presentation Overview

- ✓ Project objectives
- ✓ Project approach
- ✓ Evaluation of alternatives
- ✓ Preliminary project cost
- ✓ Funding alternatives
- ✓ Implementation

Stamford, CT On-Call - Task 1, Slide 2

WRIGHT-PIERCE
Engineering a Better Environment

Project Objectives

- Design flows
- Mechanical Screening System
  - Finer screening
  - Improved screenings handling
  - Reduce cost of screenings disposal
  - Address flooding potential

Stamford, CT On-Call - Task 1, Slide 3

WRIGHT-PIERCE
Engineering a Better Environment

Project Objectives

- Raw sewage pumps
  - Age and condition of pumps
  - Pump type & configuration
  - Energy efficiency
  - Piping & valves condition

Stamford, CT On-Call - Task 1, Slide 4

WRIGHT-PIERCE Engineering a Better Environment

Project Objectives

- Septage receiving
  - Discharge location
  - Odor control
  - Pretreatment
  - Metering

Stamford, CT On-Call - Task 1, Slide 5

WRIGHT-PIERCE Engineering a Better Environment

Project Objectives

- General considerations
  - Hydraulic impacts
  - Odor control
  - Code issues
  - Building systems
    - Doors/windows
    - Structure
    - Ventilation
  - Standby power
  - Grit removal

Stamford, CT On-Call - Task 1, Slide 6

WRIGHT-PIERCE Engineering a Better Environment

Project Approach

- Design flow
  - Establish basis for evaluation
  - Size equipment for peak hour
    - One unit out of service
  - May 1, 2014 storm event
  - Design flows
    - Min 4.3 MGD
    - Avg 16.6 MGD
    - Peak 68 MGD

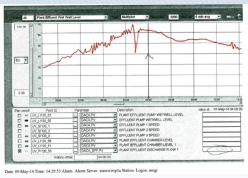

WRIGHT-PIERCE Engineering a Better Environment

Project Approach

- Hydraulic impacts
  - Size pumps for 68 MGD (four in service)
  - Evaluate impact on Primary Distribution
    - Previous peak 68 MGD
    - Some differences with previous profile
    - Potential for some clogging
  - Consider overflow weir or automated gate

WRIGHT-PIERCE Engineering a Better Environment

Evaluation of alternatives

- Mechanical screening system
  - Evaluated finer screening
    - 3/8-inch and ¼-inch
  - Rehabilitation vs. replacement
  - Climber screens vs. multi-rake
  - Considerations
    - Hydraulics
    - Additional screenings volume
- Replace with ¼-inch multi-rake screen

WRIGHT-PIERCE Engineering a Better Environment

Evaluation of alternatives

- Screenings handling system
  - Currently "Special Waste"
  - Grind/wash/compact
    - Municipal solid waste
    - More cost-effective disposal
    - Reduce odors
    - Reduce volume

Stamford, CT On-Call - Task 1, Slide 10

WRIGHT-PIERCE Engineering a Better Environment

Evaluation of alternatives

- Raw sewage pumps
  - 68 MGD Peak Flow (single largest pump out of service)
  - Extended shaft vs. dry pit submersible
  - Configuration
    - Small and large pumps
    - Five pumps same size
    - Variable speed

Stamford, CT On-Call - Task 1, Slide 11

WRIGHT-PIERCE Engineering a Better Environment

Evaluation of alternatives

- Maintain extended shafts
- Three large, two small pumps
- All with VFDs
- Motor size
  - Large pumps – 250 Hp
  - Small pumps – 200 Hp

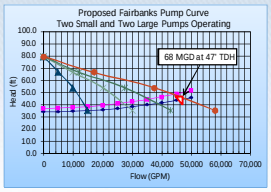

Stamford, CT On-Call - Task 1, Slide 12

WRIGHT-PIERCE Engineering a Better Environment

Evaluation of alternatives

- Piping & Valves
  - Ultrasonic testing
  - Discussions with operators
    - Some valves leak
    - Difficult to exercise
    - Consider pneumatic operators
  - Replace valves
  - Replace piping or inspect during construction

Stamford, CT On-Call - Task 1, Slide 13

WRIGHT-PIERCE Engineering a Better Environment

Evaluation of alternatives

- Septage receiving
  - Modify existing system
  - Replace with automated receiving system
- Replace with new system
  - Indoor installation
  - Better odor containment
  - Metering/invoicing
  - Pretreatment

Stamford, CT On-Call - Task 1, Slide 14

WRIGHT-PIERCE Engineering a Better Environment

Evaluation of alternatives

- Odor control
  - System sizing appears adequate
  - Repair existing ductwork
  - Enclose screens/ventilate separately
  - Enclose screenings container
  - Consider carbon system
    - Utilize separately during winter
    - Possibly in series with scrubber during warmer weather

Stamford, CT On-Call - Task 1, Slide 15

WRIGHT-PIERCE Engineering a Better Environment

Evaluation of alternatives

- General building systems
  - Code issues
    - Ventilation
    - Separate Electrical Room
  - Standby generator
    - Relocate to Blower Building
  - General improvements
    - Masonry, structure, windows, doors, electrical, mechanical, instrumentation
  - Replace gates

Stamford, CT On-Call - Task 1, Slide 16

WRIGHT-PIERCE Engineering a Better Environment

Evaluation of alternatives

- Grit removal
  - Feasible downstream of pumping station
  - Several alternatives
    - Aerated grit
    - Vortex grit
    - Eutek Headcell
  - Space designated for future primary settling tank
  - Potential $5M cost +/-

Stamford, CT On-Call - Task 1, Slide 17

WRIGHT-PIERCE Engineering a Better Environment

Summary of Recommendations

- New multi-rake ¼-inch bar screens
- New raw sewage pumps
  - Three larger pumps w/VFDs
  - Two smaller pumps w/VFDs
- Building addition
  - Septage receiving
  - Screenings container

Stamford, CT On-Call - Task 1, Slide 18

WRIGHT-PIERCE Engineering a Better Environment

Summary of Recommendations

- General building improvements
  - Structure, masonry, windows, doors
  - Odor control improvements
  - HVAC/Plumbing
- Address code issues
  - Ventilation or separate Electrical Room
- Standby power
  - Relocate to Blower Building area

WRIGHT-PIERCE Engineering a Better Environment

Anticipated Project Costs

CITY OF STAMFORD WATER POLLUTION CONTROL AUTHORITY
RAW SEWAGE PUMP STATION IMPROVEMENTS
PRELIMINARY DRAFT STUDY PHASE ESTIMATE

PROJECT COMPONENT		COST
CONSTRUCTION		$6,970,000
CONSTRUCTION CONTINGENCY	5.0%	$350,000
TECHNICAL SERVICES	18.0%	$1,255,000
MATERIALS TESTING	1.0%	$70,000
ASBESTOS & LEAD PAINT ABATEMENT		$0
DIRECT EQUIPMENT PURCHASE		$0
LAND ACQUISITION/ EASEMENTS		$0
LEGAL/ ADMINISTRATIVE	2.0%	$139,000
SUBTOTAL		$8,784,000
FINANCING	2.0%	$176,000
ENGINEER'S ESTIMATE OF PROJECT COST		$8,960,000

WRIGHT-PIERCE Engineering a Better Environment

Potential Milestone Schedule

Task	Completion date
Draft Report - Submit to DEEP	December 2014
Finalize Report	January 2015
Stamford WPCA Design Authorization	February 2015
Draft Preliminary Design Report	May 2015
60% Design Submittal	August 2015
90% Design Submittal	October 2015
WPCA/DEEP Review	November 2015
100% Design Submittal	December 2015
Bidding/ Award	January - March 2016
Construction	April 2016 to September 2017

WRIGHT-PIERCE Engineering a Better Environment

Potential Funding Sources

- CT DEEP Clean Water Fund
  - Potential for 20% grant/80% loan
- CL&P Energy Incentives
  - VFDs/controls for smaller pumps
  - Potential odor control improvements
  - Other (HVAC, lighting, motors)
- Potential for generator funding
  - DEEP
  - FEMA

Stamford, CT On-Call - Task 1, Slide 22

WRIGHT-PIERCE
Engineering a Better Environment
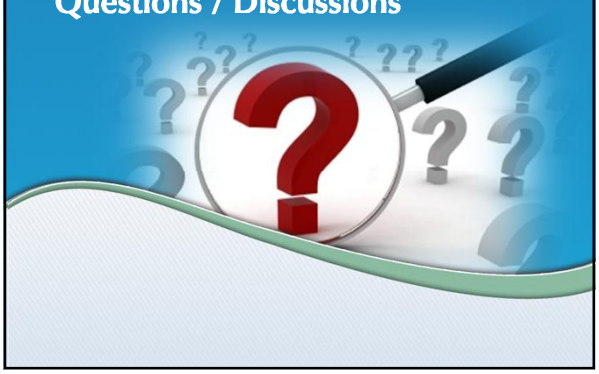
Questions / Discussions